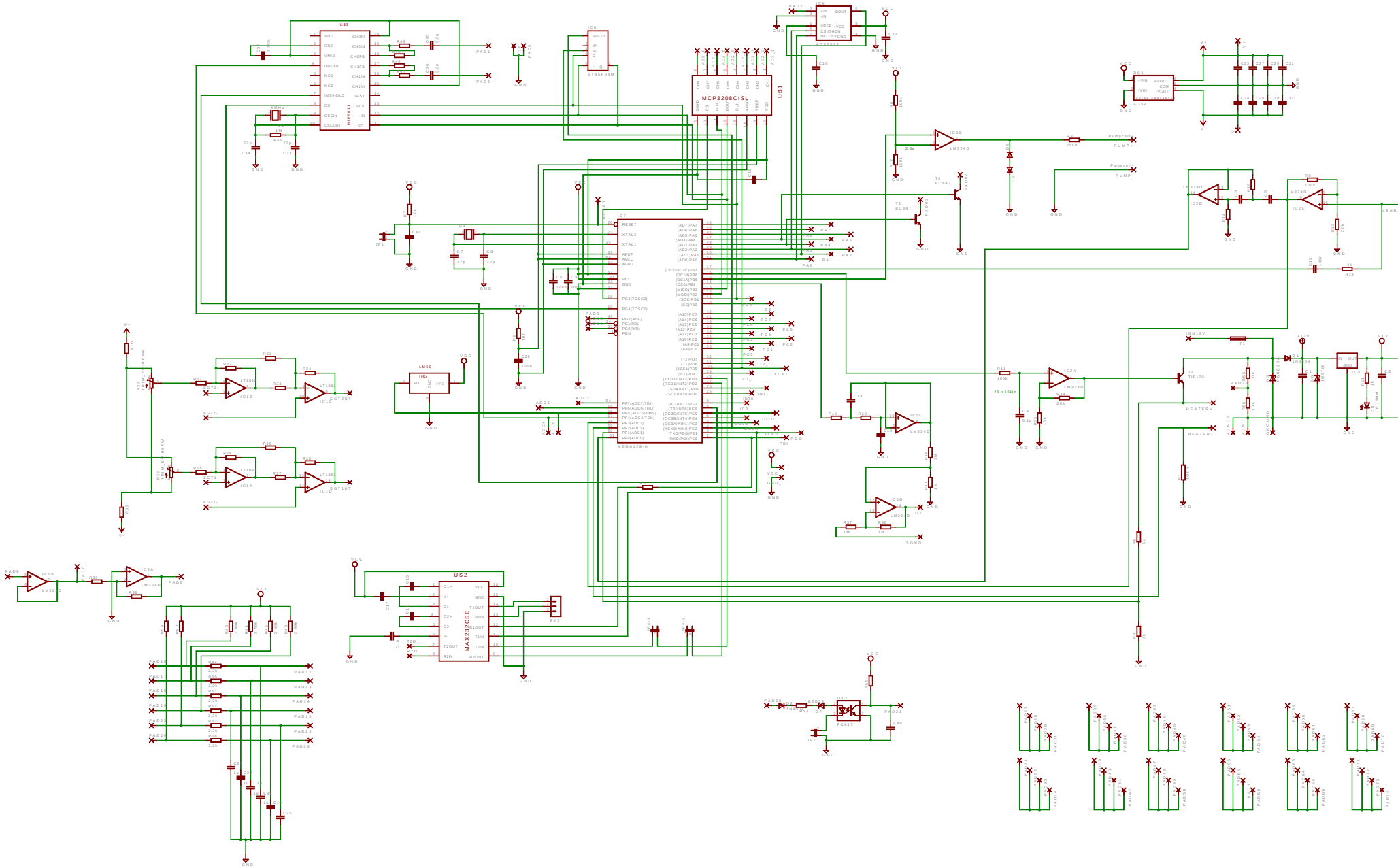
US3
HIP9011
US1
MCP3208CISL
IC6
ST35PDIM
IC7
ATMEGA128A
US4
LM50
US2
MAX232CSE
IC1B
IC1C
IC1A
IC1D
IC2A
IC2B
IC2C
IC2D
IC5A
IC5B
IC5C
IC5D
T2
TIP120
T3
BC847
T4
BC847
Pumpcable
PUMP+
PUMP-
HEATER+
HEATER-
SGNA
SGNB
SV1
PAD1
PAD5
PAD8
PAD9
PAD12
PAD13
PAD14
PAD15
PAD16
PAD17
PAD18
PAD19
PAD20
PAD21
PAD22
PAD23
PAD24
PAD25
PAD26
PAD27
PAD28
PAD29
PAD30
PAD31
PAD32
PAD33
PAD34
PAD35
PAD36
PAD37
PAD38
PAD39
PAD40
GND
VCC