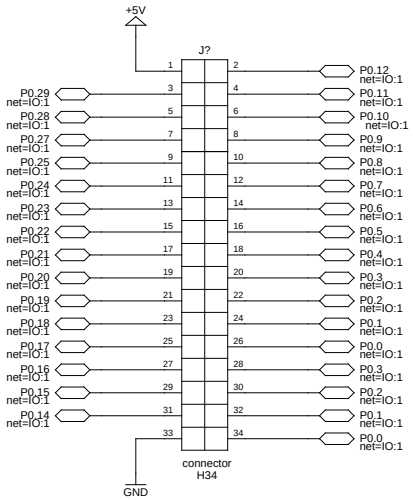

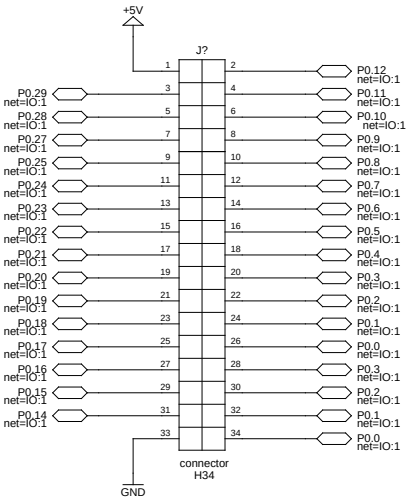

TITLE	connector		
FILE: con.sch		REVISION:	1.0
PAGE 4	OF 5	DRAWN BY:	jsztriko@mailbox.hu